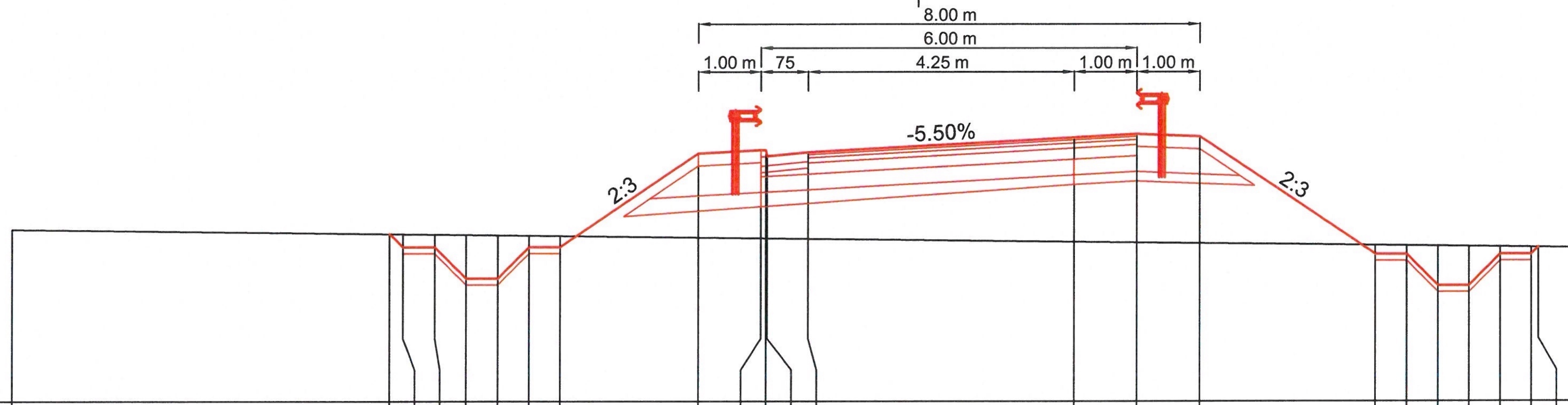

R.L. = 114.00

COTE PROIECT		116.67	116.45	116.45	115.95	115.95	116.45	116.45	117.94	118.00	118.00	117.90	117.96	118.20	118.25	118.21	116.34	116.34	115.84	115.84	116.34	116.34	116.45	
COTE TEREN	116.74	116.67	116.66	116.66	116.65	116.65	116.64	116.63	116.61	116.59	116.59	116.59	116.59	116.54	116.53	116.52	116.48	116.48	116.47	116.46	116.46	116.45	116.45	116.33
DISTANTE	-17.00	-10.95	-10.73	-10.23	-9.73	-9.23	-8.73	-8.23	-6.00	-5.00	-4.92	-4.90	-4.25	0.00	1.00	2.00	4.81	5.31	5.81	6.31	6.81	7.31	7.43	17.00

KM = 380.00

SUPERVIZOR
D.R.D.P. TIMIŞOARA
BUN DE EXECUŢIE
DATA: 01.04.2022

SOCIETATEA COMERCIALA TOTAL ROAD S.R.L. BUCUREŞTI - ROMÂNIA

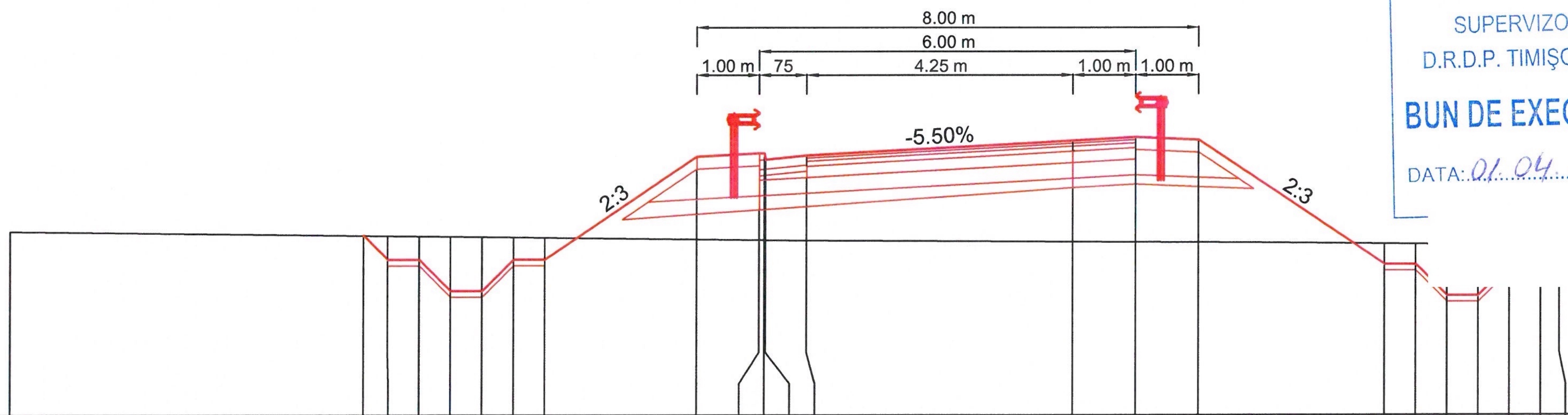

R.L. = 114.00

COTE PROIECT		116.86	116.47	116.47	115.97	115.97	116.47	116.47	118.11	118.16	118.16	118.06	118.13	118.36	118.42	118.38	116.39	116.39	115.89	115.89	116.39	116.39	116.69	
COTE TEREN	116.92	116.86	116.85	116.85	116.84	116.84	116.83	116.83	116.80	116.79	116.79	116.79	116.78	116.76	116.75	116.75	116.72	116.72	116.71	116.71	116.70	116.70	116.69	116.59
DISTANTE	-17.00	-11.33	-10.95	-10.45	-9.95	-9.45	-8.95	-8.45	-6.00	-5.00	-4.92	-4.90	-4.25	0.00	1.00	2.00	4.97	5.47	5.97	6.47	6.97	7.47	7.77	17.00

KM = 360.00

POPESCU A. C. ... VERIFIC...

BENEFICIAR: COMPANIA NATIONALA DE ADMINISTRAREA INFRASTRUCTURII RUTIERE S.A. (C.N.A.I.R. S.A.)

ANTREPRENOR: TODINI CONSTRUZIONI GENERALI S.p.A.

TITLU PROIECT: PROIECTARE SI EXECUȚIE „DRUM DE LEGĂTURĂ AUTOSTRADA A1 ARAD - TIMIȘOARA - DN 69"

FAZA PROIECT: PROIECT TEHNIC DE EXECUTIE (P.T.E.)

CONTRACT NR. 92/7703/01.02.2021

PROIECT NR. 08/2021

SPECIFICATIE	NUME	SEMNATURA
DESENAT	Teh. Sorin VASILACHE	
PROIECTAT	Ing. Mihai COROIAN	
SEF PROIECT	Ing. Catalin GRUIANU	
VERIFICAT	Ing. Adrian NISTOR	

DATA Martie 2022

MĂRIMEA A3

SCARĂ 1:100

TITLU PLANSA: LUCRARI DE INFRASTRUCTURA RUTIERA
PROFILURI TRANSVERSALE CURENTE
NOD A1 - BRETEA 2

NUMAR PLANSA: PTC - 576

PICHET -

Revizie

NR.	DATA	DESCRIERE
0	08.2021	Emitere P.T.E.
1	09.2021	Conf. nr.290/DLA1-224
2	02.2022	Conf. ASR 92/93833

PAGE 1 / 1